DEPENDABLE PRODUCTS SINCE 1955

Industrial Control Dampers – Models AAO-2 & AAM-2

Design Features – Galvanized Steel Industrial Control Damper with airfoil blade design for low-pressure drop and high static pressure applications in industrial systems.

STANDARD CONSTRUCTION

FRAME
8" x 2" x 14 gauge galvanized steel channel to 1/4" steel channel
BLADES
5" to 8" wide, 16 gauge galvanized steel in airfoil shape
AAO – Opposed Blade
AAM – Parallel Blade
BLADE AXLES & BEARINGS
AXLE – 1/2" to 1" dia.
BEARING – 2-bolt flange
LINKAGE
Plated steel linkage concealed in channel (standard construction)
MAXIMUM SIZE
Unlimited, with mullions, structural bracing supplied by others
MAXIMUM SINGLE SECTION
48" W x 96" H (I.D)
MINIMUM SIZE
6" W x 6" H (I.D)
MAXIMUM TEMPERATURE
350 Deg. Fahrenheit
FINISH
Mill Finish
OPERATOR
None

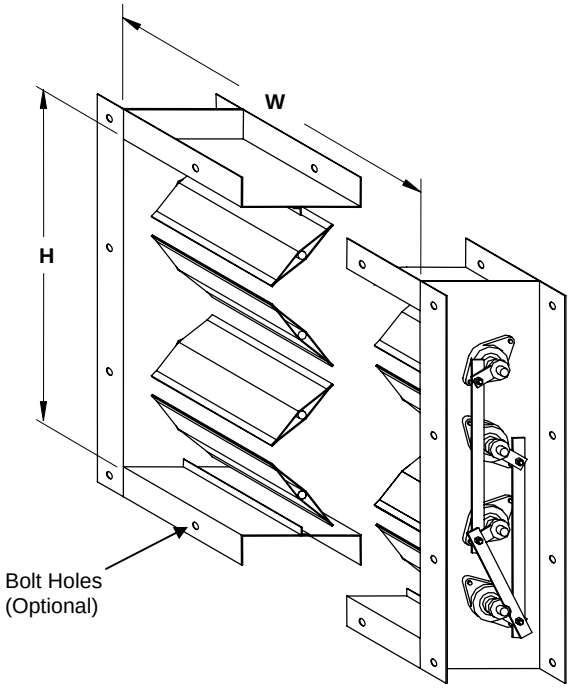

AAO

OPTIONAL CONSTRUCTION

SPECIFIED MATERIAL – Available in stainless steel
BLADE AXLES & BEARINGS – 1-1/2" to 2" dia
SLEEVE AND DUCTWORK CONNECTION – 10 ga. to 16 ga. galvanized steel to 30" in length. – Transitions available in: round, oval, rectangular or custom. Factory can install access door, retaining angles, or flange connections.
FINISH – Air-dry primer, polyurethane, epoxy, or enamel, Baked epoxy or special finishes available
OPERATOR – Manual, electric or pneumatic, please consult operator listing. (Operator type and location will affect the temperature rating of the damper)
SEALS – Silicone Blade seals and Stainless Steel jamb seals available
BOLT HOLES – Bolt Holes in flange available

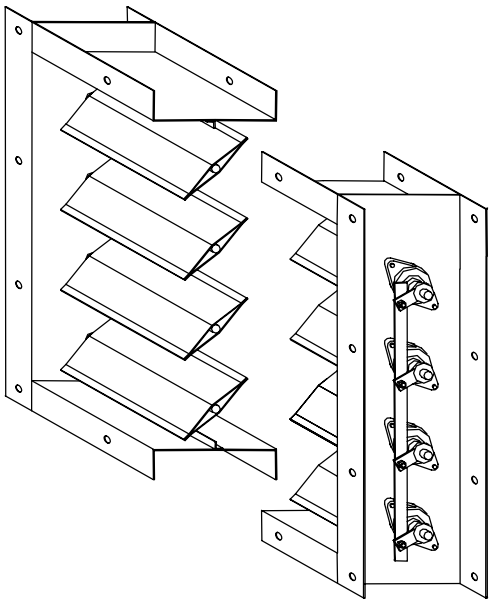
AAM

DATE	ARCHITECT			CUSTOMER
PROJECT				
ITEM	QTY	W	H	DESCRIPTION

DEPENDABLE PRODUCTS SINCE 1955
SAFE-AIR/DOWCO
Engineering and General Offices
1855 South 54th Avenue, Cicero, Illinois 60804
Phone 708-652-9100 FAX 708-652-9158

AAO-2 & AAM –2 PERFORMANCE

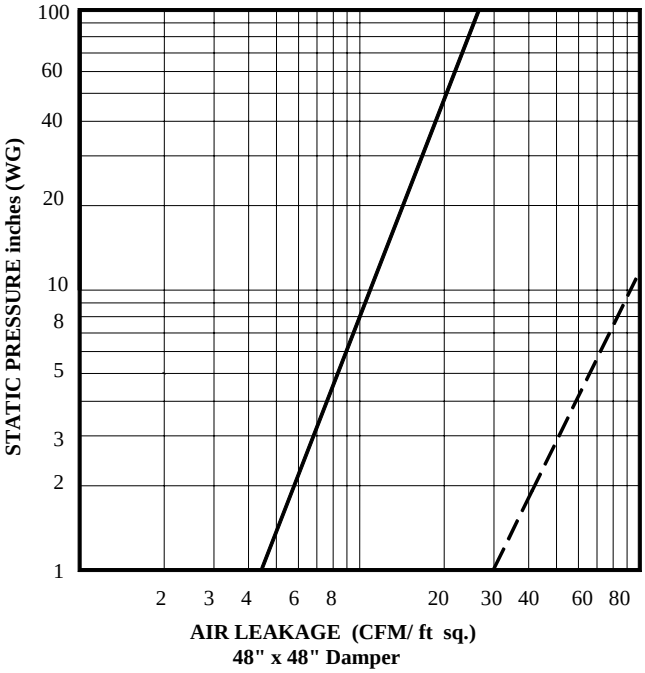

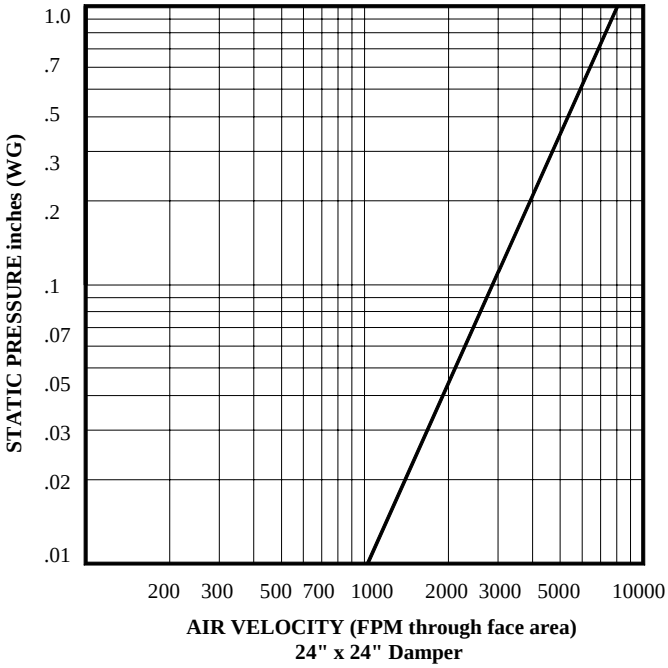

SOLID LINE – LEAKAGE W/ SEALS ————

DASHED LINE – LEAKAGE W/OUT SEALS – – – – – –

Damper Width Inches	Maximum Static Pressure (W.G.)	Maximum Velocity
12”	35"	9000 FPM
24”	30"	9000 FPM
36”	25”	9000 FPM
48”	20"	9000 FPM

FREE AREA CALCULATIONS IN SQ. FT.

WIDTH

HEIGHT

Inches	12	16	20	24	28	32	36	40	44	48
12	0.84	1.12	1.39	1.67	1.95	2.23	2.50	2.78	3.06	3.34
16	1.17	1.56	1.95	2.34	2.73	3.12	3.50	3.89	4.28	4.67
20	1.42	1.89	2.37	2.84	3.31	3.78	4.25	4.73	5.20	5.67
24	1.67	2.23	2.78	3.34	3.89	4.45	5.00	5.56	6.12	6.67
28	1.92	2.56	3.20	3.84	4.48	5.12	5.75	6.39	7.03	7.67
32	2.25	3.00	3.75	4.50	5.25	6.00	6.75	7.50	8.25	9.00
36	2.50	3.34	4.17	5.00	5.84	6.67	7.50	8.34	9.17	10.00
40	2.75	3.67	4.59	5.50	6.42	7.34	8.25	9.17	10.09	11.00
44	3.00	4.00	5.00	6.00	7.00	8.00	9.00	10.00	11.00	12.00
48	3.34	4.45	5.56	6.67	7.78	8.89	10.00	11.12	12.23	13.34
52	3.59	4.78	5.98	7.17	8.37	9.56	10.75	11.95	13.14	14.34
56	3.84	5.12	6.39	7.67	8.95	10.23	11.50	12.78	14.06	15.34
60	4.09	5.45	6.81	8.17	9.53	10.89	12.25	13.62	14.98	16.34
64	4.42	5.89	7.37	8.84	10.31	11.78	13.25	14.73	16.20	17.67
68	4.67	6.23	7.78	9.34	10.89	12.45	14.00	15.56	17.12	18.67
72	4.92	6.56	8.20	9.84	11.48	13.12	14.75	16.39	18.03	19.67
76	5.25	7.00	8.75	10.50	12.25	14.00	15.75	17.50	19.25	21.00
80	5.50	7.34	9.17	11.00	12.84	14.67	16.50	18.34	20.17	22.00
84	5.75	7.67	9.59	11.50	13.42	15.34	17.25	19.17	21.09	23.00
88	6.09	8.12	10.14	12.17	14.20	16.23	18.25	20.28	22.31	24.34
92	6.34	8.45	10.56	12.67	14.78	16.89	19.00	21.12	23.23	25.34
96	6.59	8.78	10.98	13.17	15.37	17.56	19.75	21.95	24.14	26.34