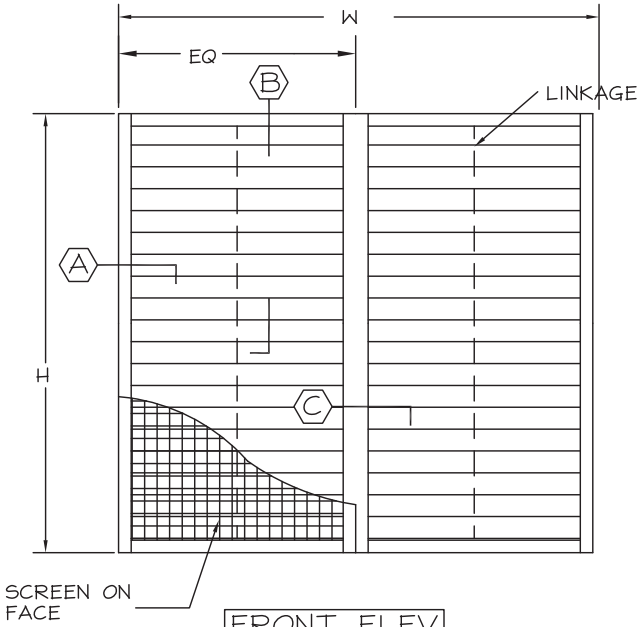

FRONT ELEV.

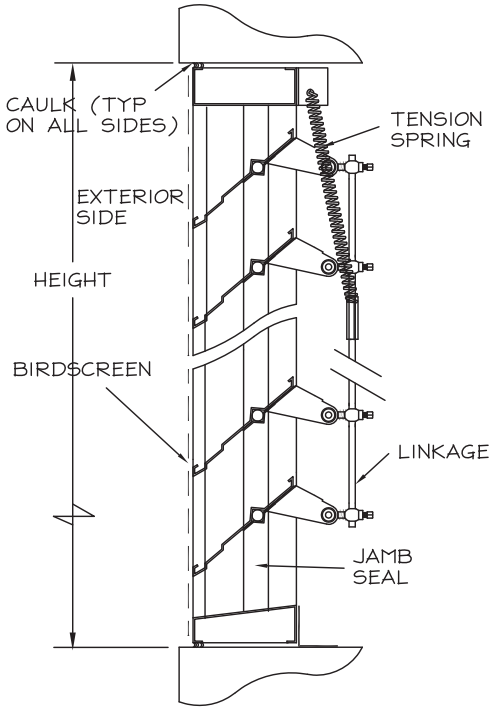

SECTION "B"

STANDARD CONSTRUCTION

MODEL: ADBF-04-300F-B
FRAME: 16 GA. GALV. STEEL
BLADES: 16 GA. GALV. STEEL
BEARINGS: 1/2" DIA. BRONZE OILITE
AXLES: 1/2" DIA. PLATED STEEL
LINKAGE: PLATED STEEL
SCREEN: 1/2 MESH X 19 GA. GALV. IN FRAME ON FACE
FINISH: NATURAL MILL
OPERATOR: WING NUT TYPE

NOTES:

1. ALL LOUVERS TO BE FABRICATED 3/8" UNDER LISTED OPNG. SIZES UNLESS SPECIFIED "ACTUAL".
2. ALL OPNG SIZES TO BE FIELD VERIFIED AND GUARANTEED BY OTHERS PRIOR TO FABRICATION.
3. OTHER SURROUNDING FINISHES ARE FOR REFERENCES ONLY AND TO BE SUPPLIED BY OTHERS.

LOUVER SCHEDULE

TAG	QTY	OPNG SIZE (WXH)	NOTES

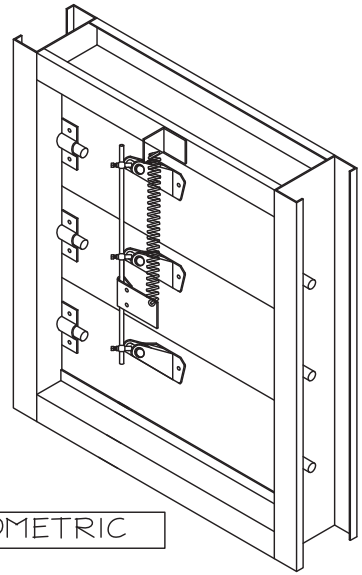

ISOMETRIC

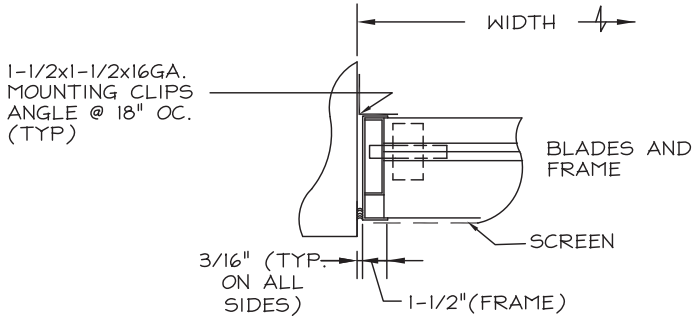

SECTION "A"

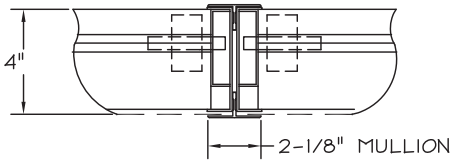

SECTION "C"

DOWCO DEPENDABLE PRODUCTS SINCE 1955
1855 SOUTH 54TH AVENUE, CICERO, IL. 60650

REV.	DESCRIPTION	DATE	BY

ARCH/ENGR:
CUSTOMER:
PROJECT:
TITLE: A-DBF-04/SERIES
DATE:
DRAWN:
CHKD:
DRWG #: